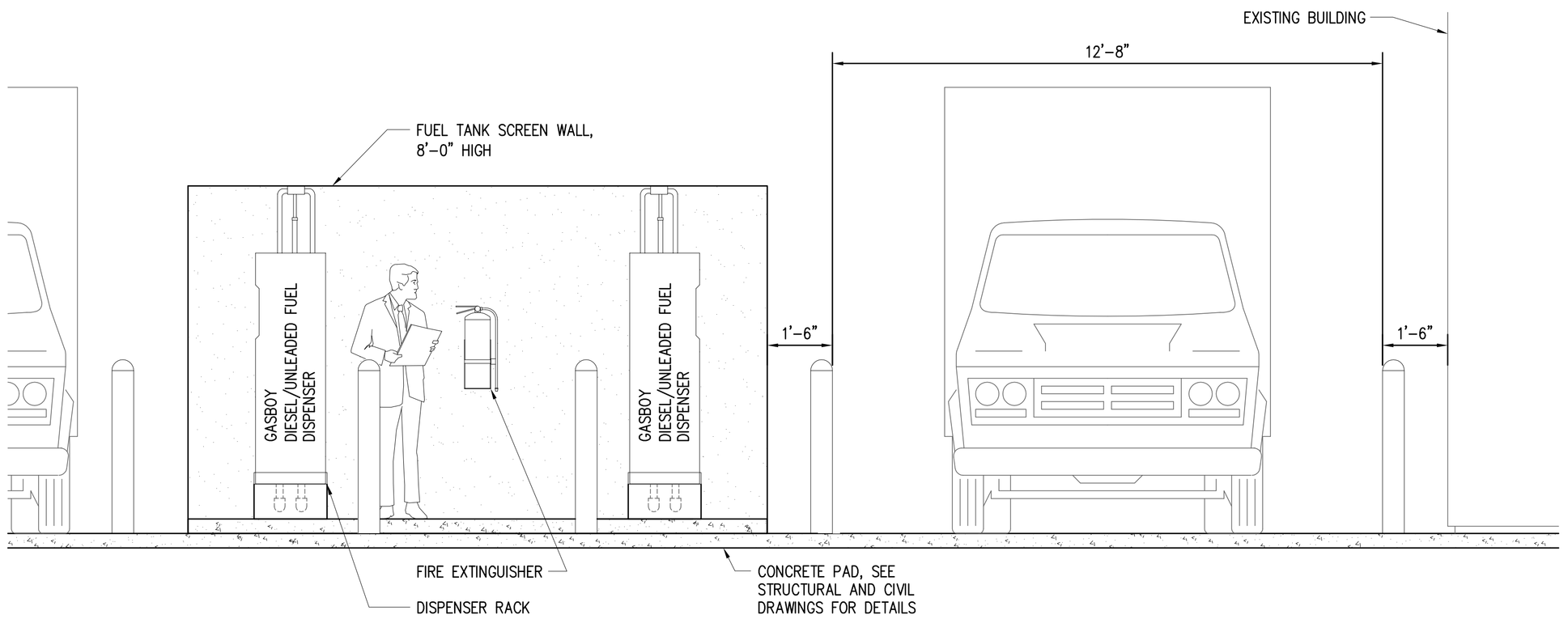

SIDE ELEVATION - LOOKING NORTH (B)

SCALE 1/2"=1'-0"

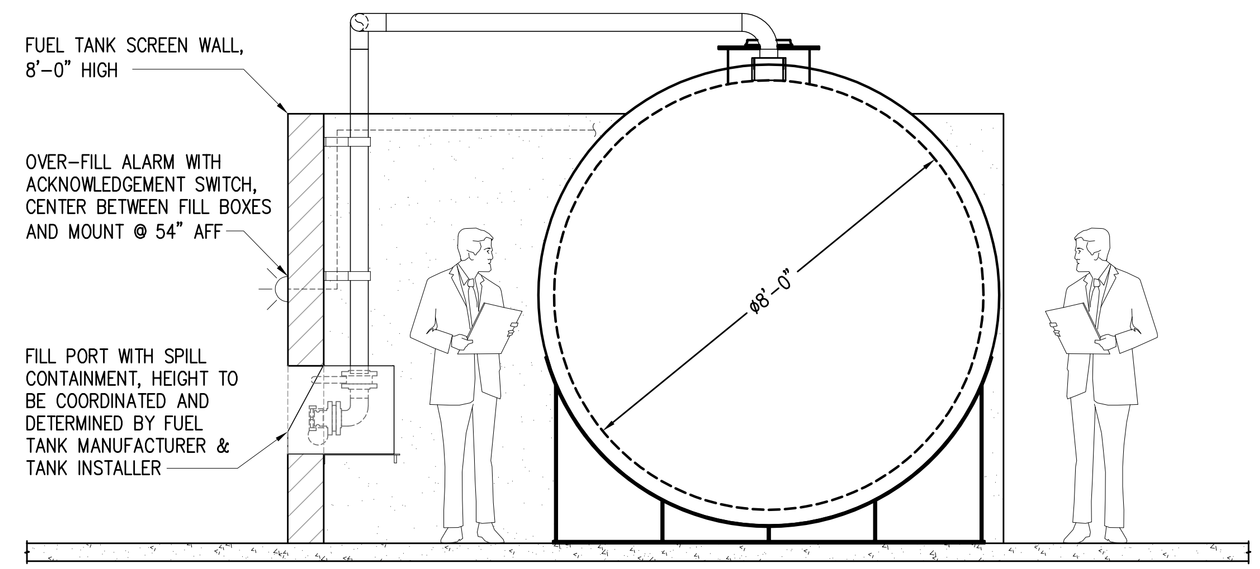

SIDE ELEVATION - LOOKING NORTH (C)

SCALE 1/2"=1'-0"

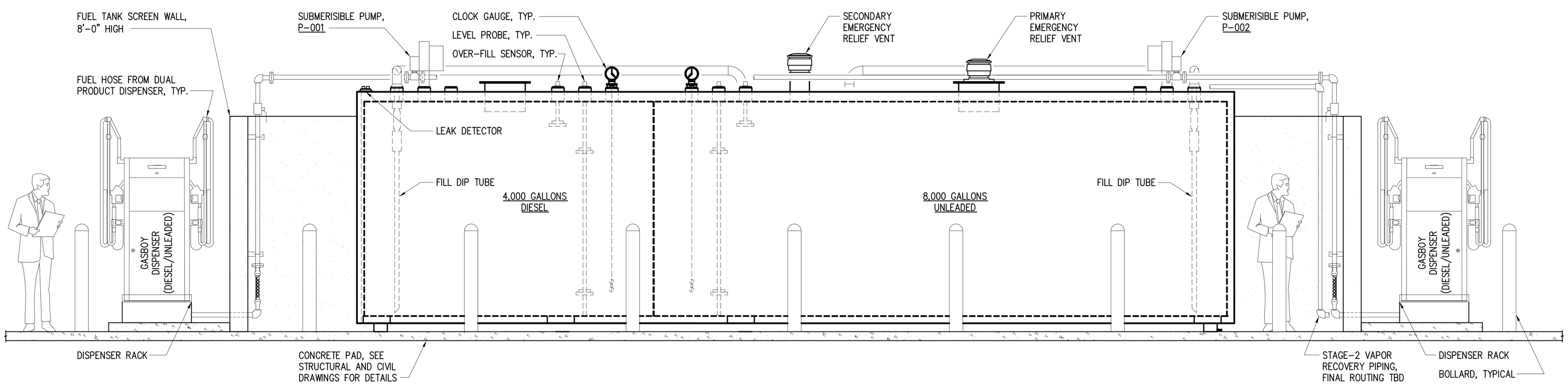

LONGITUDINAL ELEVATION - LOOKING WEST (A)

SCALE 1/2=1'-0"

RICHEY BLVD. FUEL TANK REPLACEMENT

PIMA COUNTY

FACILITIES MANAGEMENT
150 WEST CONGRESS, 5TH FL.
TUCSON, AZ 85701

ARCHITECTURE
ENGINEERING
CONSTRUCTION MANAGEMENT

2051 W. SUNSET RD.
SUITE NO. 101
TUCSON, ARIZONA 85704
TEL: (520) 293-1488
FAX: (520) 293-8349
WWW.m3eng.com

Revisions

Description	Date
1	
2	
3	
4	
5	
6	

Drawn: AN
Checked: WB
Issue Date: 12-17-2010

Drawing Title
MECHANICAL PIPING DETAILS AND SECTIONS

Sheet Number
MP501

M3PN 100100

Last Update: 7.1.2011

File: P:\2010\100100\Reference\Bid\100100 MP501.dwg LAST UPDATE: 7/7/2011 11:13 AM BY: AN7761